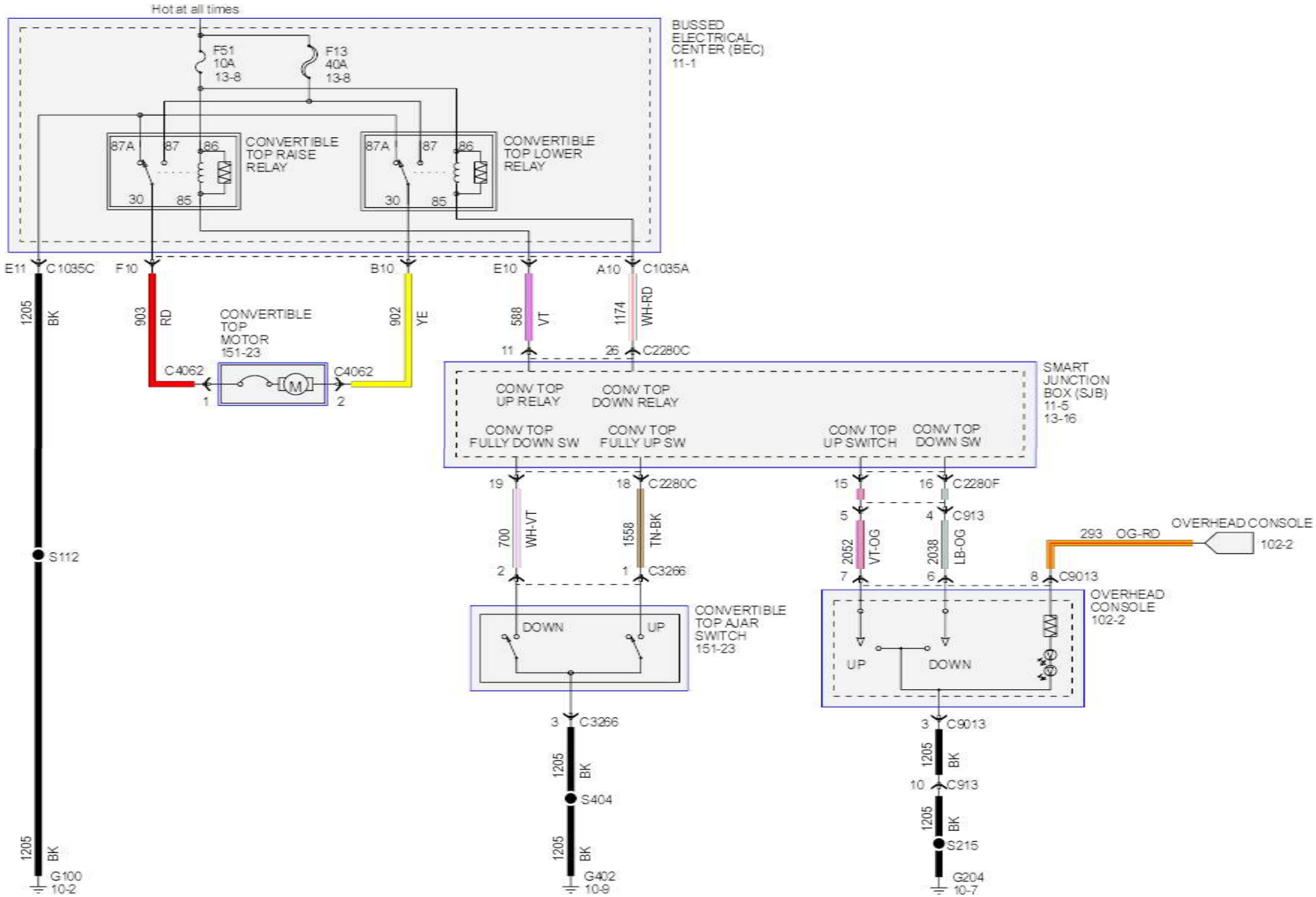
Hot at all times
BUSSED ELECTRICAL CENTER (BEC) 11-1
F51 10A 13-8
F13 40A 13-8
87A
87
86
30
85
CONVERTIBLE TOP RAISE RELAY
CONVERTIBLE TOP LOWER RELAY
E11
C1035C
F10
B10
E10
A10
C1035A
1205 BK
903 RD
902 YE
588 VT
1174 WH-RD
CONVERTIBLE TOP MOTOR 151-23
C4062
M
11
26
C2280C
SMART JUNCTION BOX (SJB) 11-5 13-16
CONV TOP UP RELAY
CONV TOP DOWN RELAY
CONV TOP FULLY DOWN SW
CONV TOP FULLY UP SW
CONV TOP UP SWITCH
CONV TOP DOWN SW
19
18
15
16
C2280F
5
4
C913
700 WH-VT
1558 TN-BK
2052 VT-OG
2038 LB-OG
293 OG-RD
OVERHEAD CONSOLE 102-2
S112
2
1
C3266
7
6
8
C9013
CONVERTIBLE TOP AJAR SWITCH 151-23
DOWN
UP
OVERHEAD CONSOLE 102-2
3
1205 BK
S404
10
S215
G100 10-2
G402 10-9
G204 10-7